Maritieme Academie Harlingen

INTERREG Deutschland Nederland

Europäische Union
Europese Unie

MariGreen
Maritime Innovations in Green Technologies

# What we do

Consecutive study-lines lower, medium and higher education and training for professionals for IWT and maritime

Broad education, aimed at the total maritime and IWT logistic chain:

- Inland, coastal navigation and world-wide merchant shipping
- Maritime related 'on-shore' occupations
- Specific contract-based courses (~2000 participants yearly)

# What we do

Integrated part of the European network of educational institutes for Inland Navigation (EDINNA – Education in Inland Navigation)

Conducting various international projects under the umbrella of the European Commission, Interreg and National Authorities, aiming on infrastructure planning, increased navigational safety and greening

Being a ‘knowledge-centre’ for students, companies and government

# LNG Market Uptake

## Innovation Projects

- Low pressure LNG tank
- Plug and Play Energypack
- Standard modular LNG system
- Methane catalyst for LNG engines
- Training technologies

## Goals

- Cost reduction for „small scale" LNG-propulsion
- Improvement of emissions of LNG-propulsion
- Safe operation of LNG-propulsion through training

This is where we started

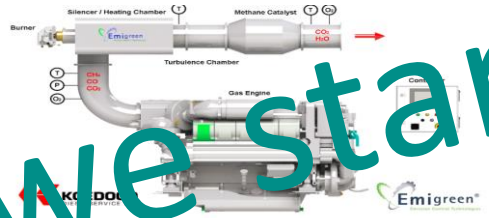

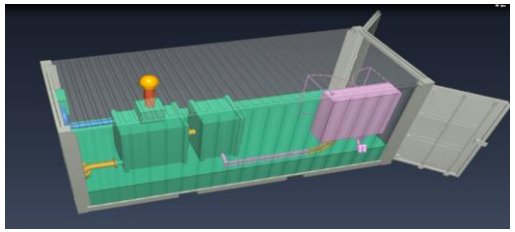

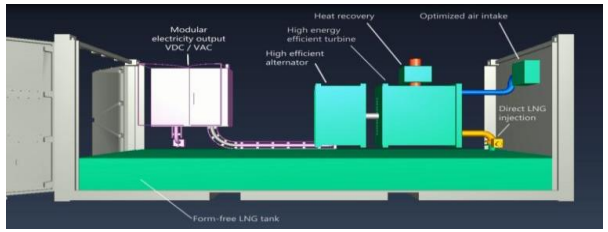


INTERREG Deutschland Nederland

Europäische Union
Europese Unie

MariGreen
Maritime Innovations in Green Technologies

# This is where we are now!

## EMELI

### *Toekomstige situatie*

*"Kempenaar"*
*55m x 7.2m 682T 1961*

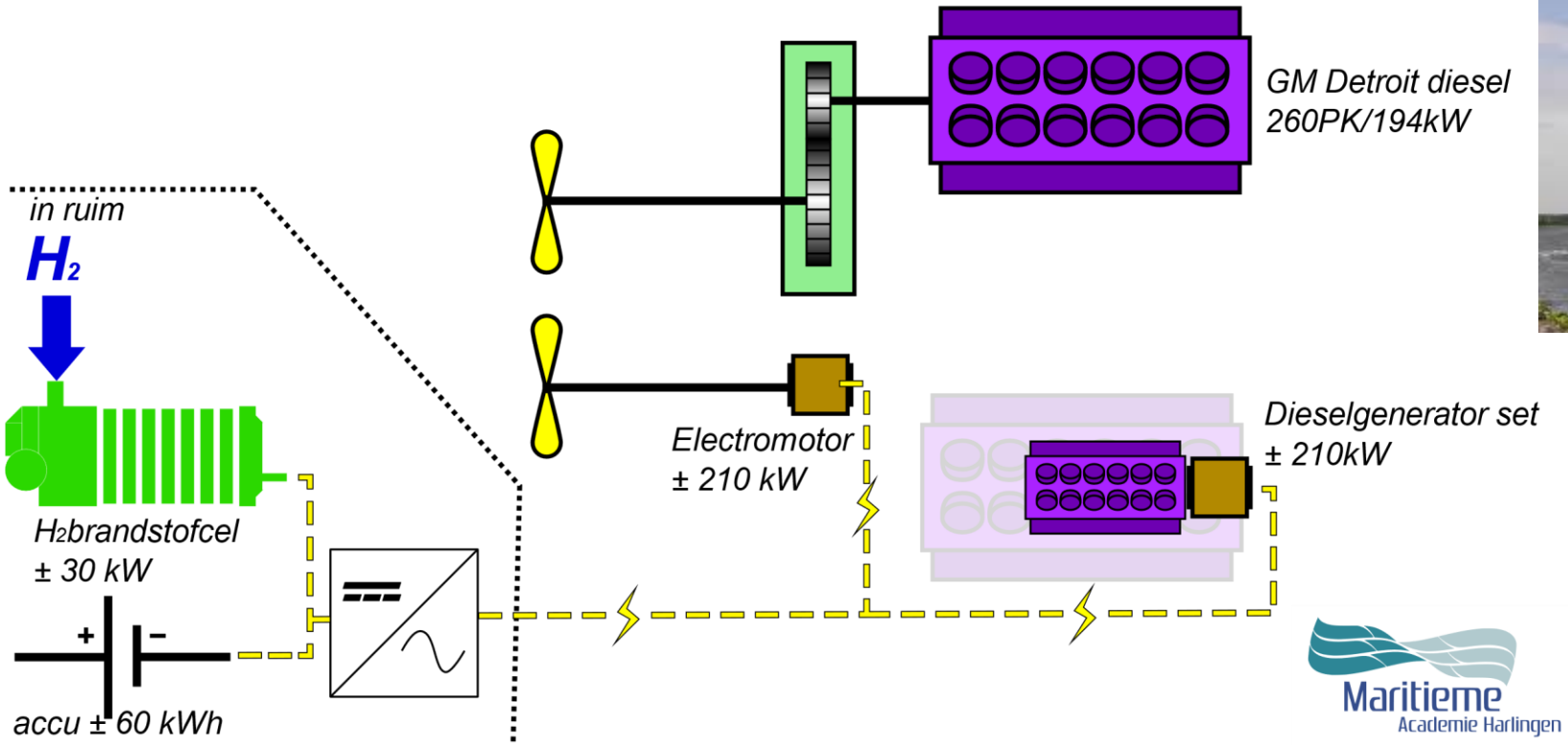

Maritieme Academie Harlingen

INTERREG Deutschland Nederland

Europäische Union
Europese Unie

MariGreen
Maritime Innovations in Green Technologies

Maritieme Academie Harlingen

INTERREG Deutschland Nederland

Europäische Union
Europese Unie

MariGreen
Maritime Innovations in Green Technologies

Maritieme Academie Harlingen

INTERREG Deutschland Nederland

Europäische Union
Europese Unie

MariGreen
Maritime Innovations in Green Technologies

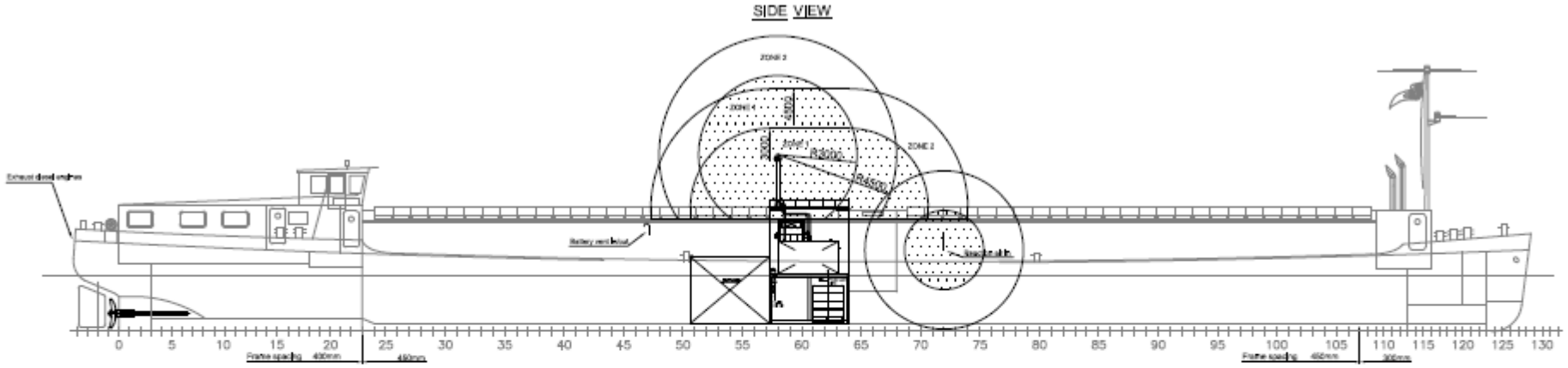


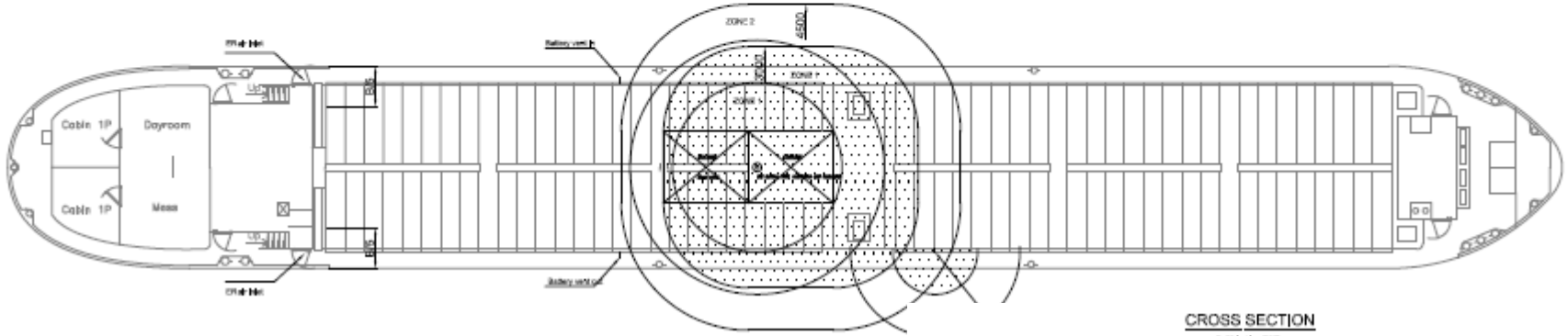


CROSS SECTION

CROSS SECTION

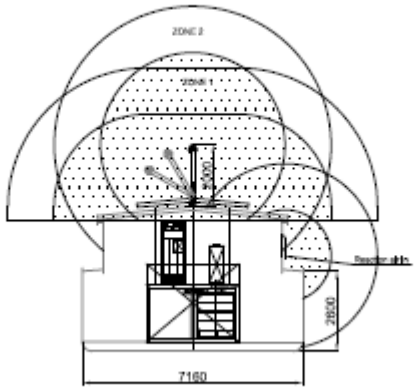


Maritieme Academie Harlingen

INTERREG Deutschland Nederland

Europäische Union
Europese Unie

MariGreen
Maritime Innovations in Green Technologies

Maritieme Academie Harlingen

INTERREG Deutschland Nederland

Europäische Union
Europese Unie

MariGreen
Maritime Innovations in Green Technologies

Maritieme Academie Harlingen

INTERREG Deutschland Nederland

Europäische Union
Europese Unie

MariGreen
Maritime Innovations in Green Technologies

# Challenges for Hydrogen Propulsion in IWT

- Administrative challenges
- Certification for maritime components
- Currently no widespread bunkering infrastructure
- Currently no satisfactory solution for certified hydrogen storage onboard IWT vessels