Tier III NO_x
Exhaust Gas Recirculation on 2- Stroke Engines

Referent: Manfred Hohlweg
Head of Sales & Promotion Germany
Representative Office Hamburg

Agenda

1	Tier III Strategy
2	EGR Technology Principles
3	Installation Considerations
4	Scope of Supply: Engine Builder & Shipyard
5	CAPEX & OPEX
6	References
7	Emission Project Guide

NO_x Reduction

Two-Stroke Tier III Standard Technologies

HP SCR

(Selective catalytic reduction)

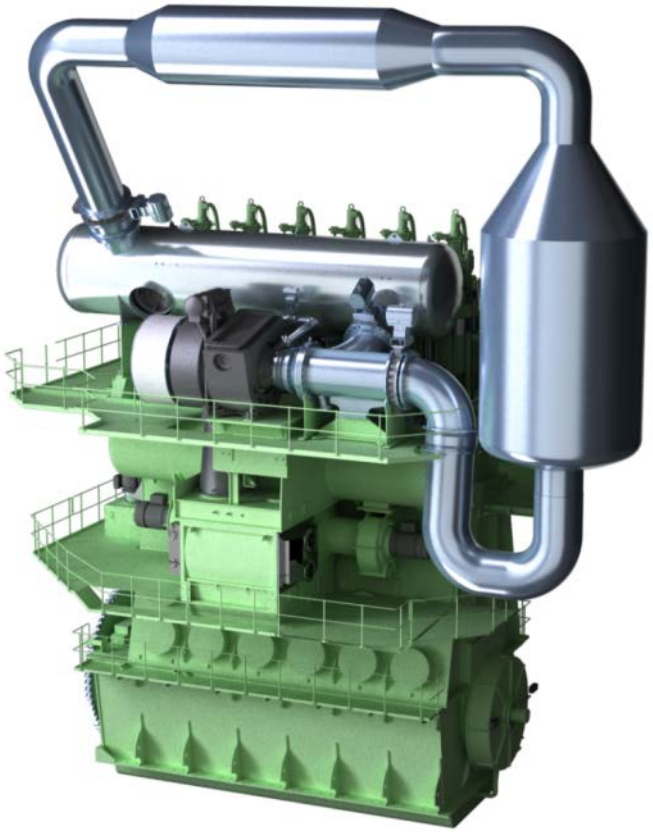

EGR

(Exhaust gas recirculation)

Exhaust Gas Recirculation

Principle

EGR

Exhaust gas recirculation

Low sulphur fuels

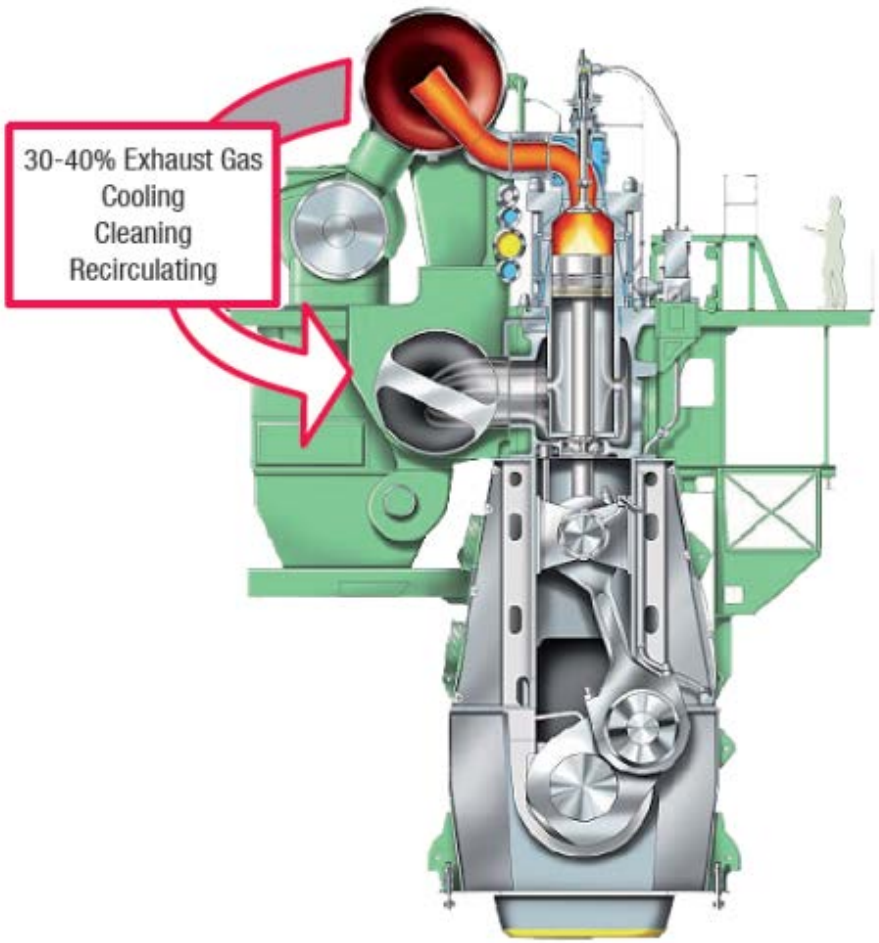

Emission Reduction Control System

for EGR

ERCS

- Control of all valves
- Measurement of O_2 in scavenging air
- Control of NO_X reduction through control of recirculation rate (EGR blower rpm), determining scavenging air O_2
- ”Near limit” control of EGR to avoid smoke

Emission Reduction Control System

Setup

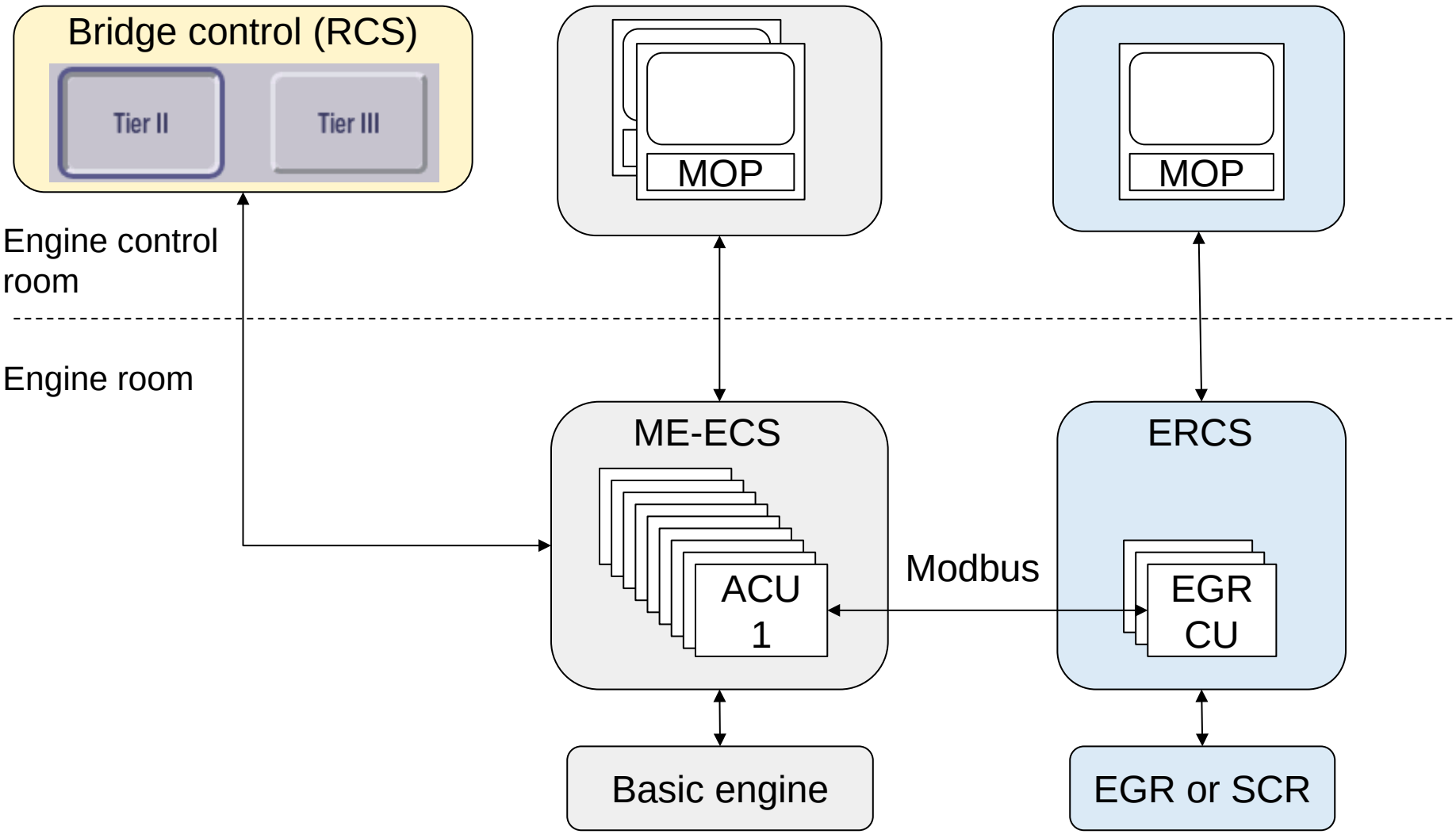

MAN Diesel & Turbo's Tier III Development

~2006 → 2014

Fully fuel flexible solutions
EGR + SCR

2014 → …

0.1% sulphur optimized solutions

HFO solutions, design status 2014

MEPC 66, London, April 2014:

- All NO_x-ECA's also SO_x-ECA's
- No risk of retrofit demands in future NO_x-ECA's
- Newest possible NO_x-ECA: ~ 2018
- Ship owners expect SO_x compliance by low S fuel

EGR Consequences

High → low sulphur fuel

EGR component	Cost reduction potential	Size/installation reduction potential
Blower	Good (≈20%)	None
WTS	Good(≈30%)	Good
Control system	None	None
pH control system	Limited	Limited
Sensor system	Good(≈30%)	None
Scrubber + pre-scrubber	Good(≈30%)	Good
Cooler	Limited	Good
Drainers, valves , pumps etc.	Limited	Good
Material choices	Limited	None
Overall unit sizes	Good(≈30%)	Good

Not HFO/Low sulphur fuel dependent

EGR layout

Change of Tier III strategy

HFO/HS (3.5%)
Incl. scrubber

→

LS (0.1%)
No scrubber

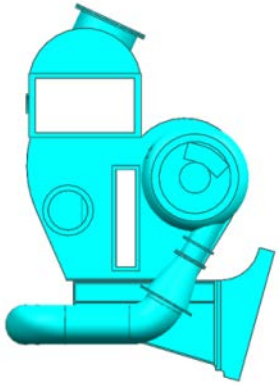

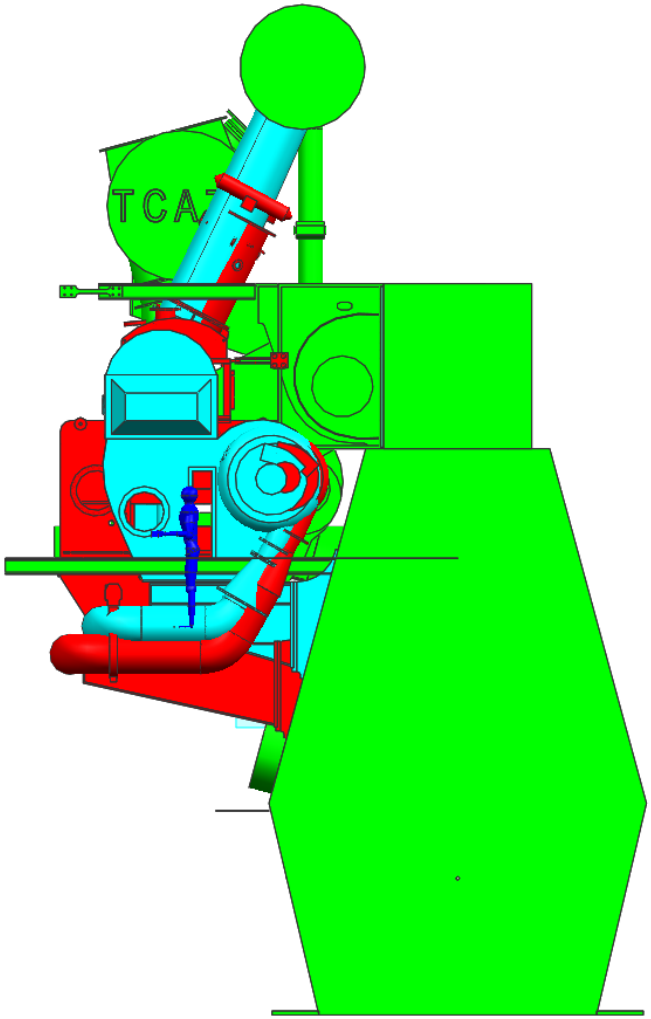

NOx Reduction – EGR layout

EGR layout

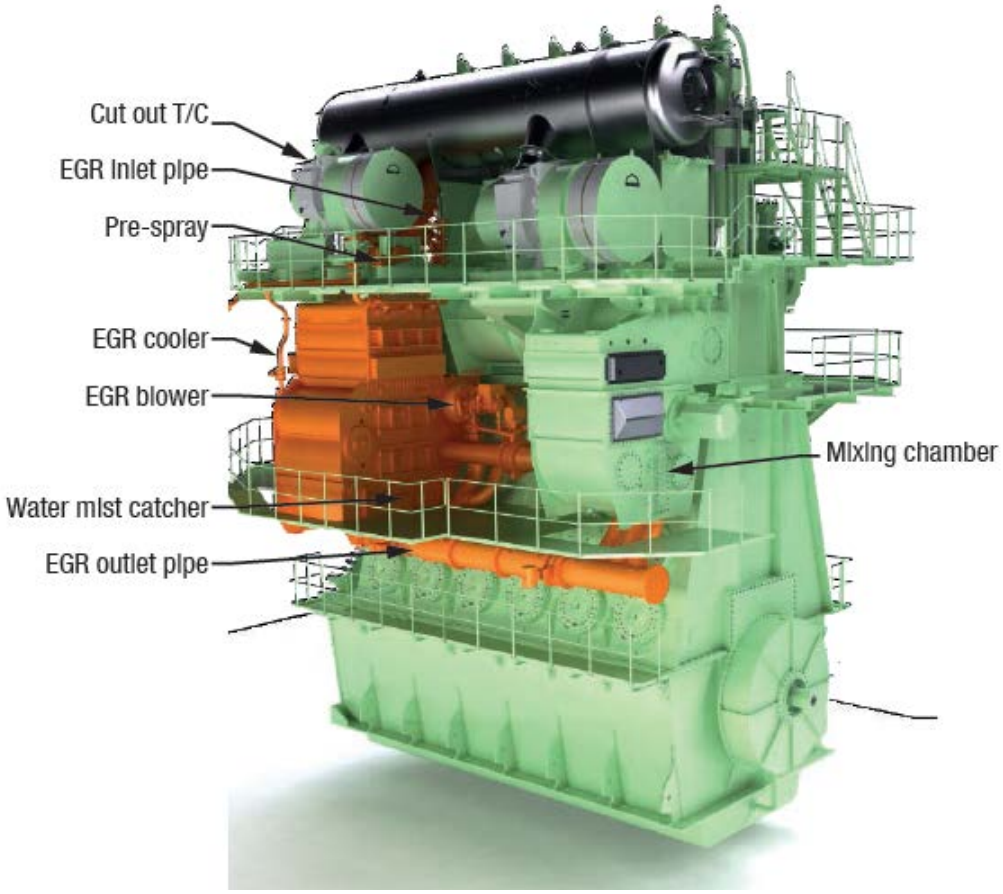

EGR diagram

EGR – By-pass matching

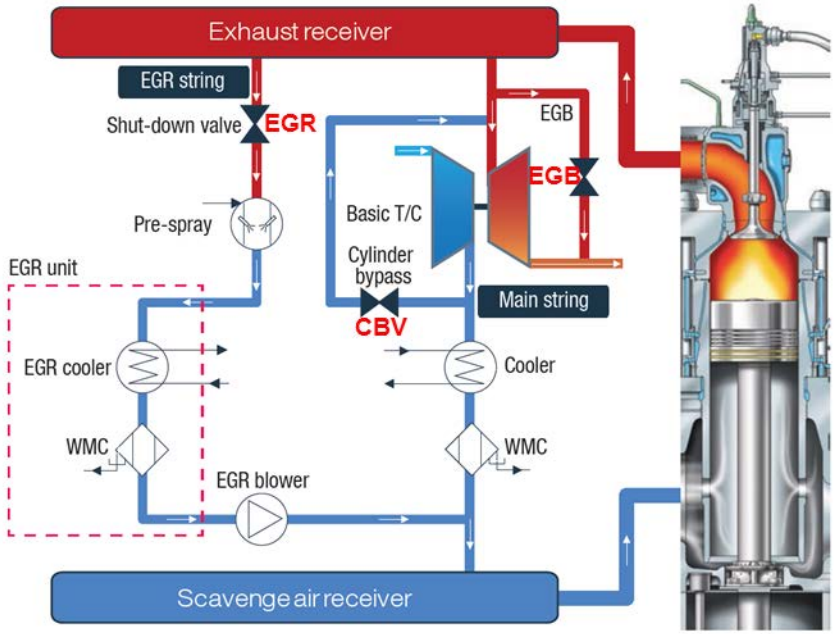

EGR – Cut-out matching

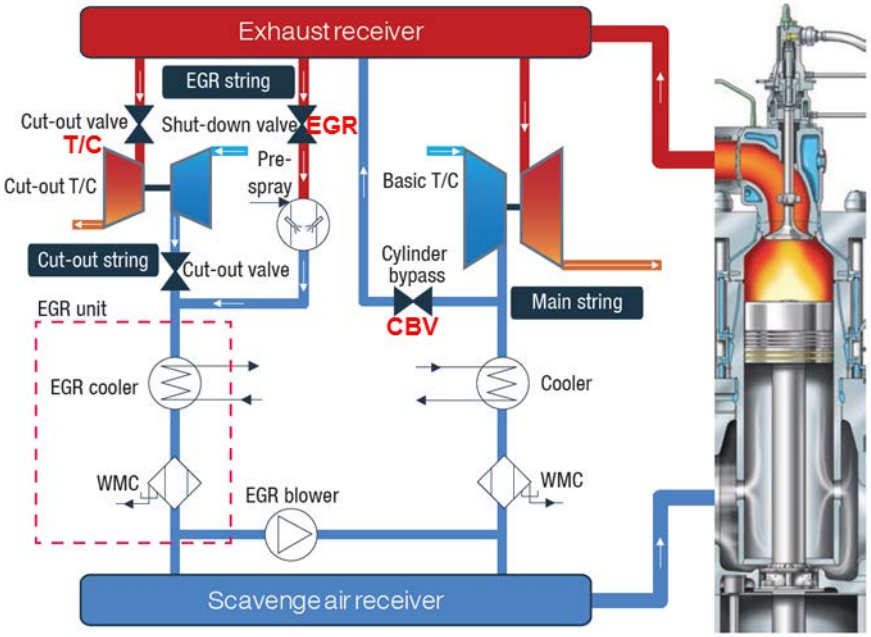

Bypass matching - 45 ≤ Bore ≤ 70

	Tier II mode			Tier III mode		
MCR	EGR	CBV	EGB	EGR	CBV	EGB
100	Closed	Closed	Open	Open	Open	Closed
75						
65						
50						
25					Closed	

TC cut-out matching - Bore ≥ 80

	Tier II mode			Tier II mode – TC cut-out			Tier III mode		
MCR	EGR	CBV	T/C	EGR	CBV	T/C	EGR	CBV	T/C
100	Closed	Closed	Cut in	Not applicable			Open	Closed	Cut out
75								Partly Open	
65				Closed	Closed	Cut out			
50									
25								Closed	

EGR By-pass matching

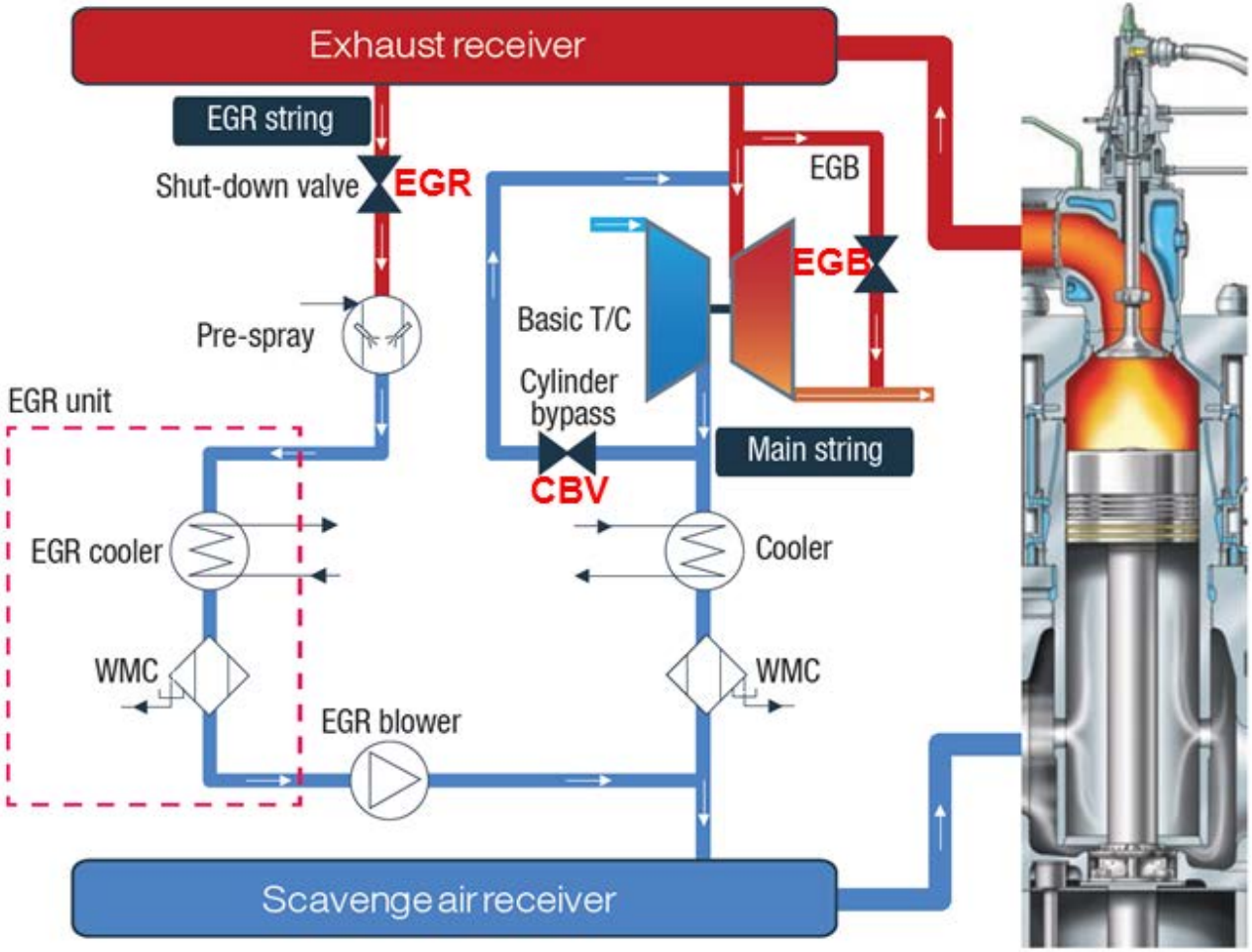

EGR Cut-out matching

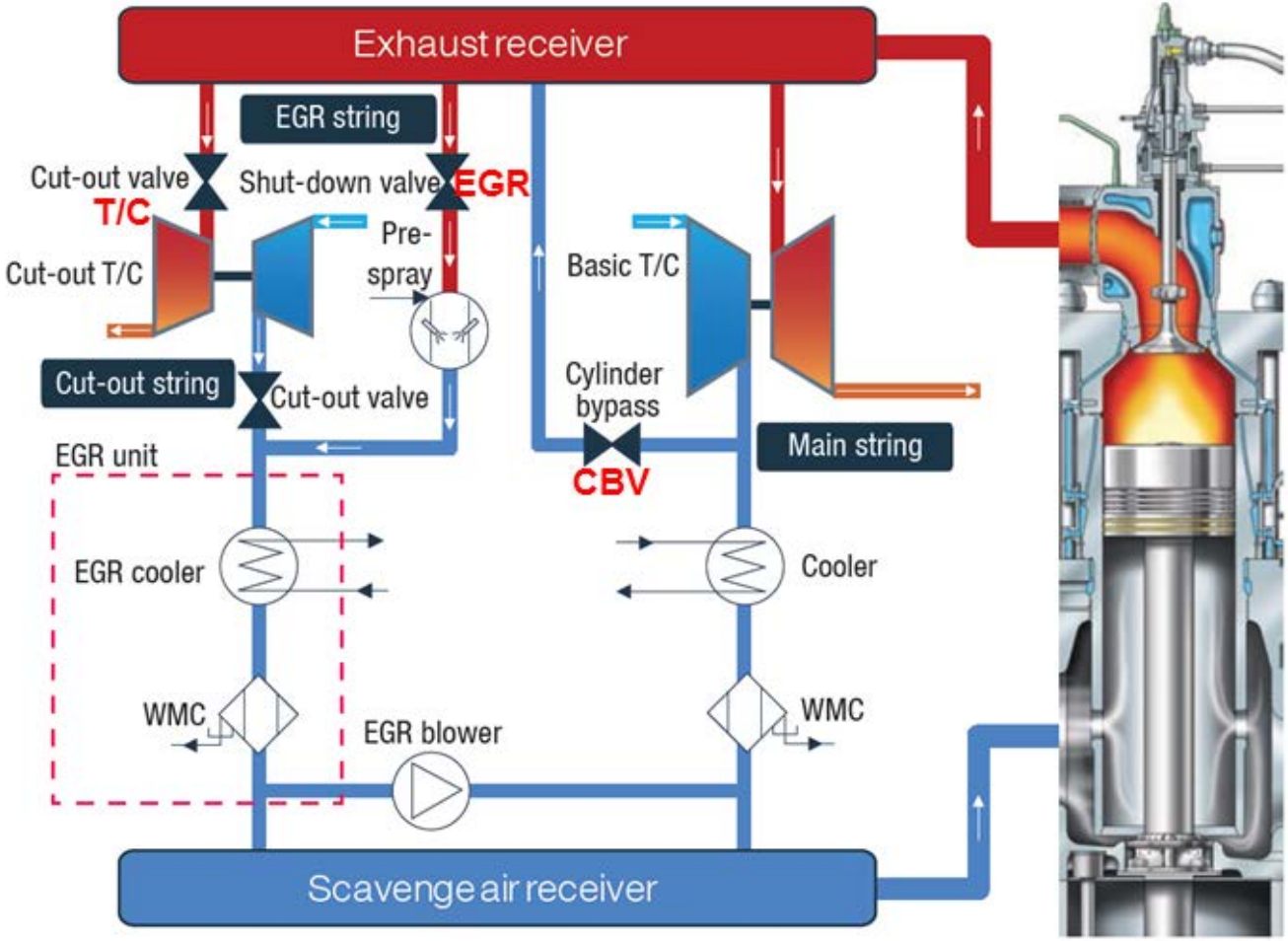

EGR outline

6G70ME-C9
EGR by-pass matching

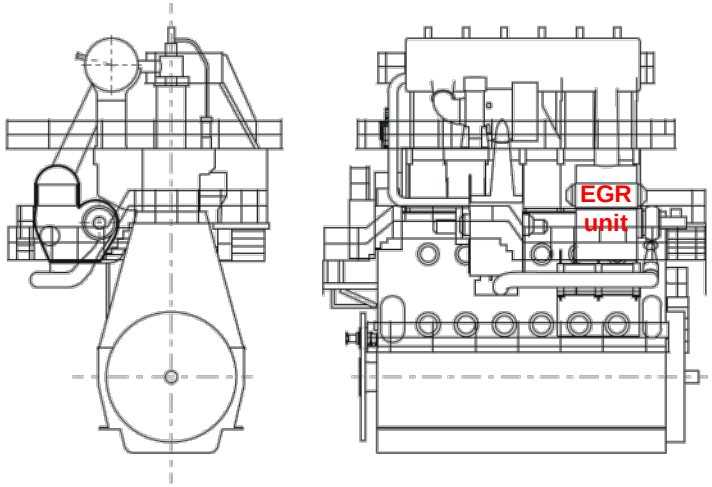

7S90ME-C9
EGR cut-out matching

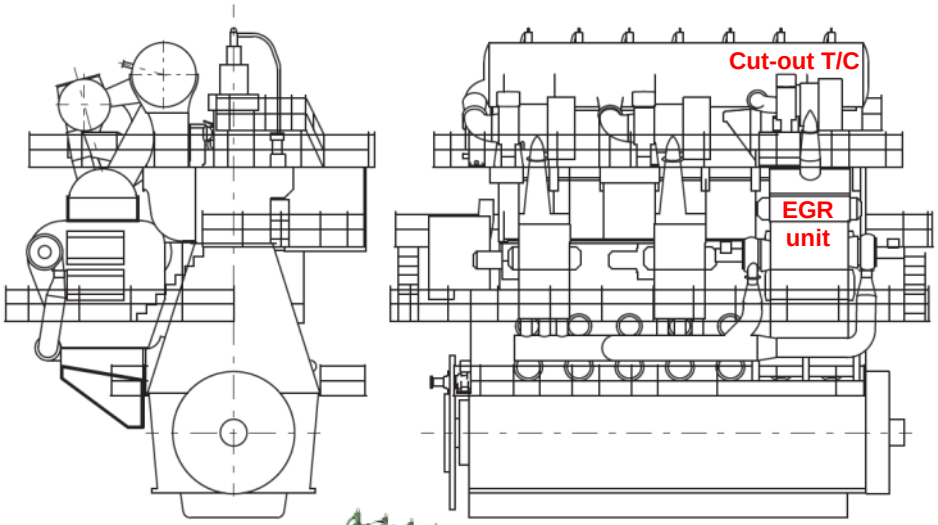

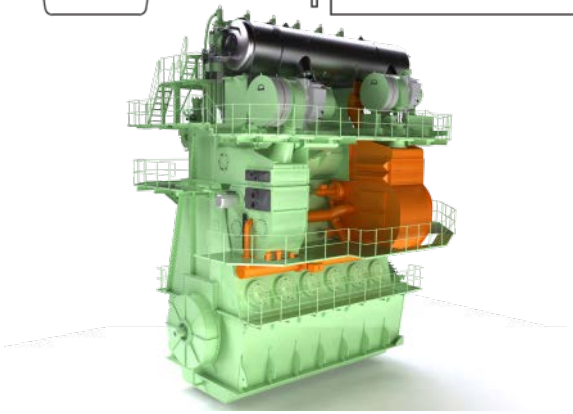

Schematics Water Treatment

Alfa Laval – today's HFO solution

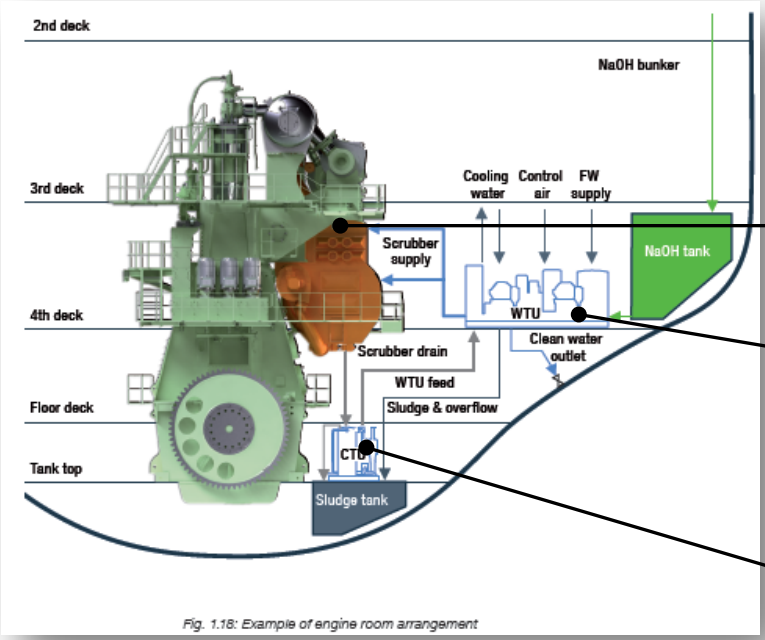

Fig. 1.18: Example of engine room arrangement

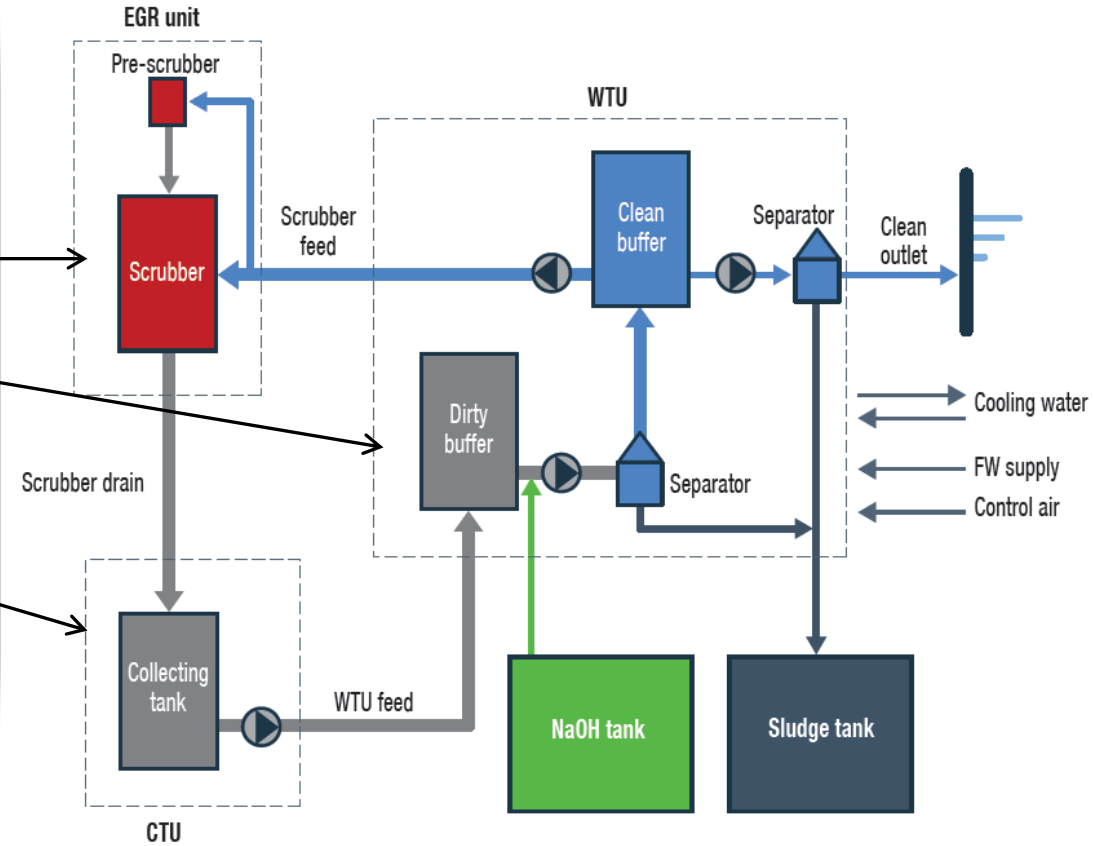

EGR WTS new solution (RTU)

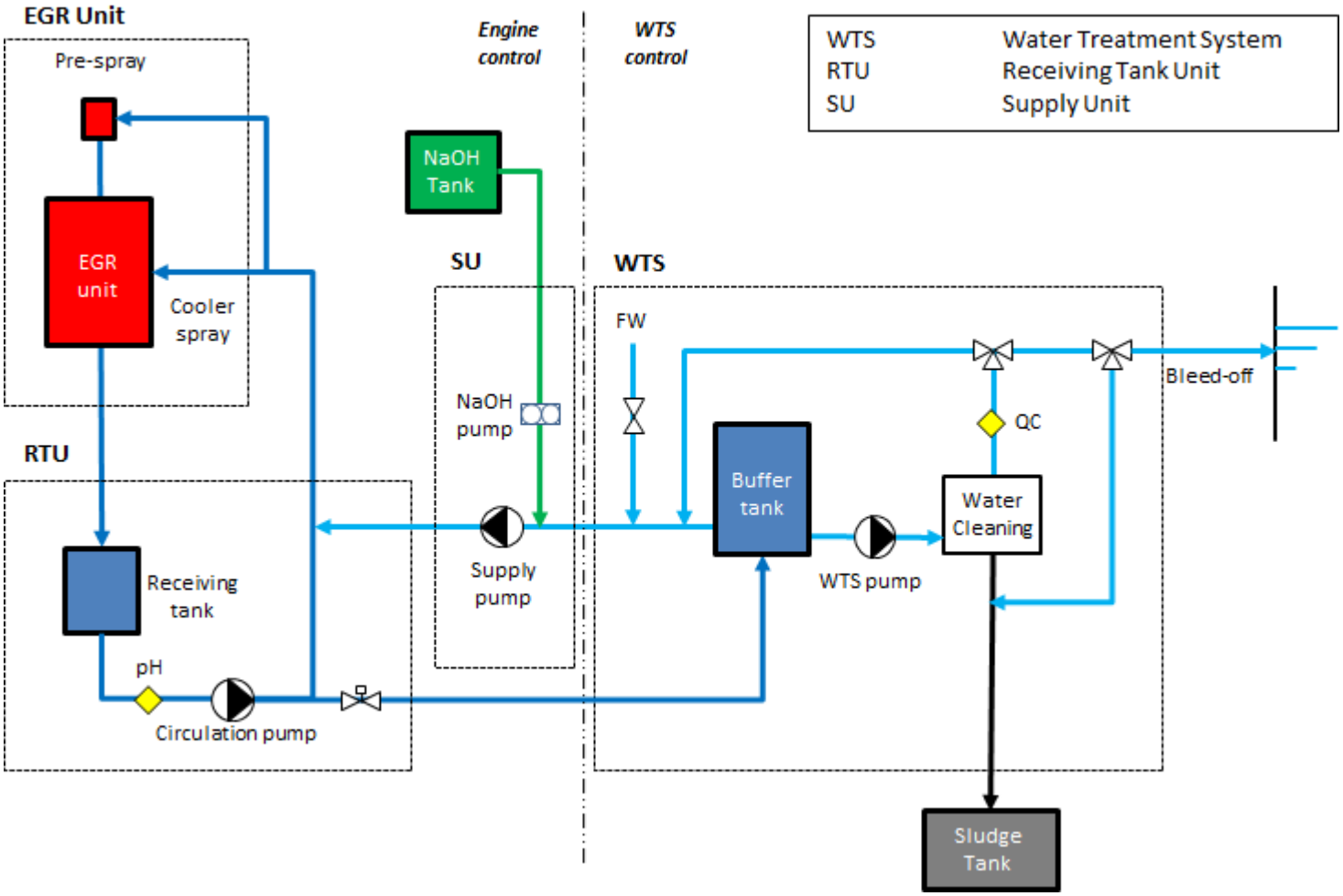

EGR installation

Previous (CTU) vs. new (RTU)

PREVIOUS

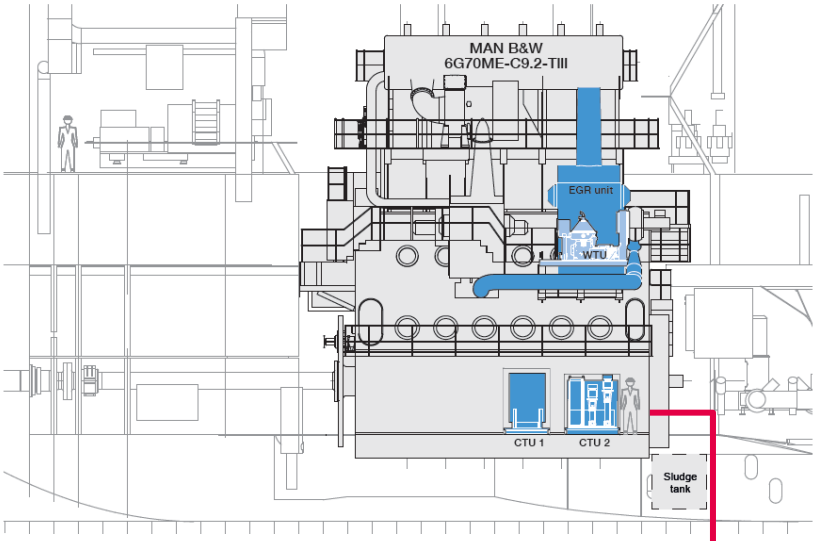

NEW

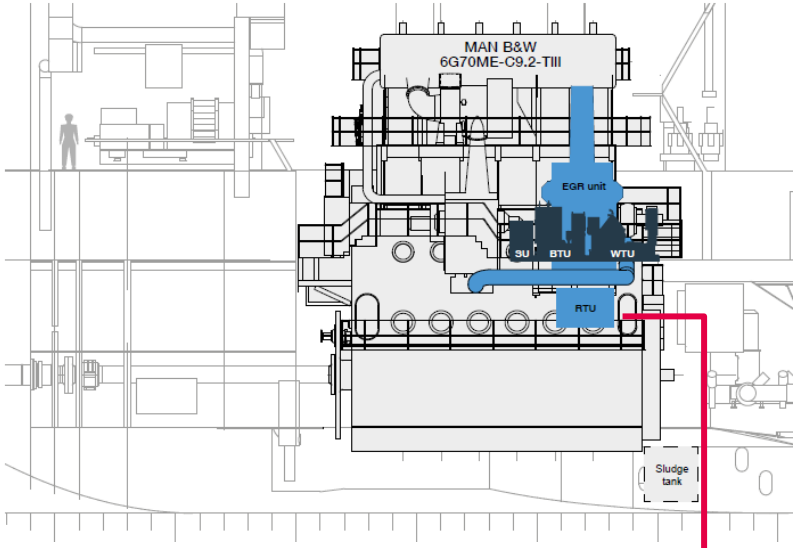

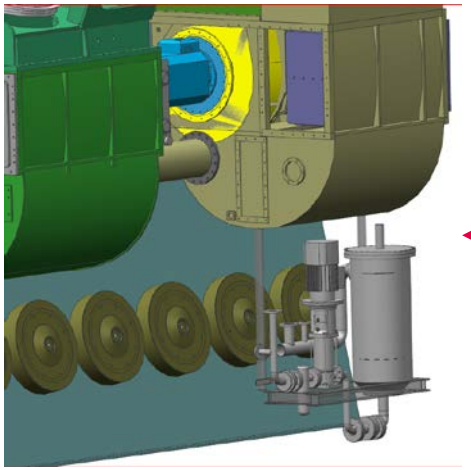

EGR installation

New (RTU)

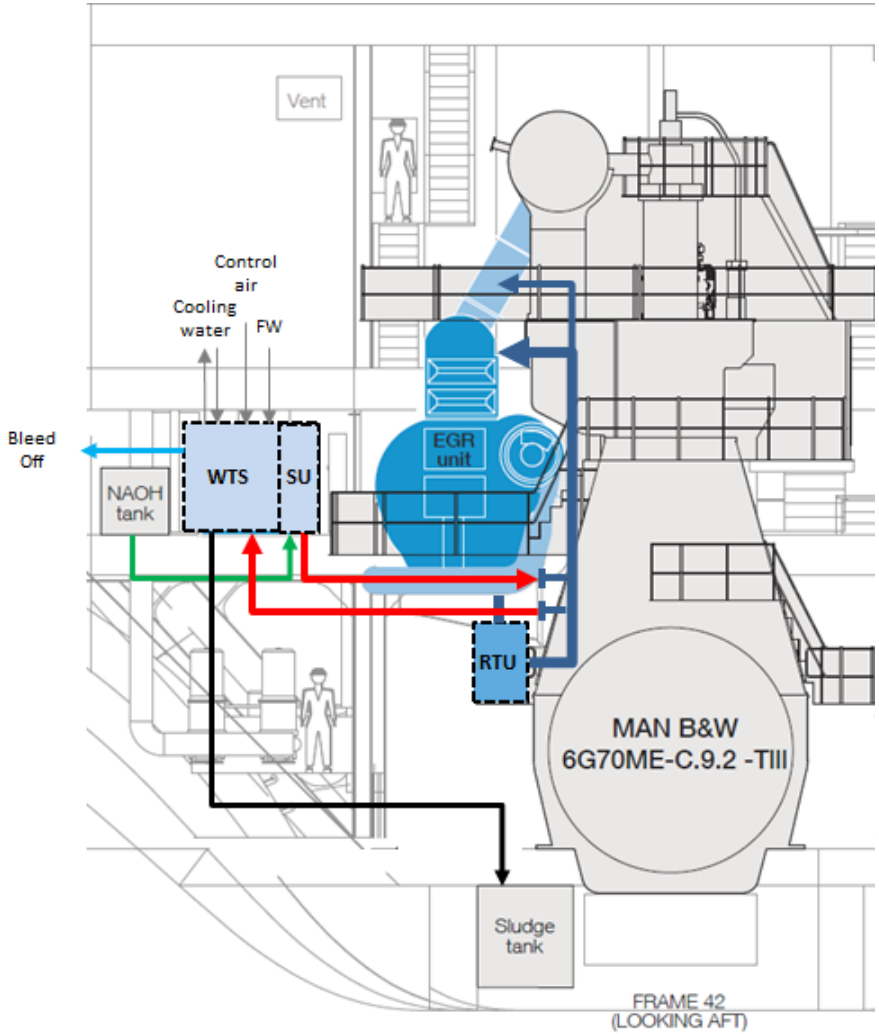

NO_x Tier III Certification

EGR shop test set up, full installation

E/B permanent	S/Y delivery	E/B assembly
NaOH tank	Water Treatment System	EGR Unit
Sludge tank	Supply Unit	Receiving Tank Unit
Bleed-off tank		

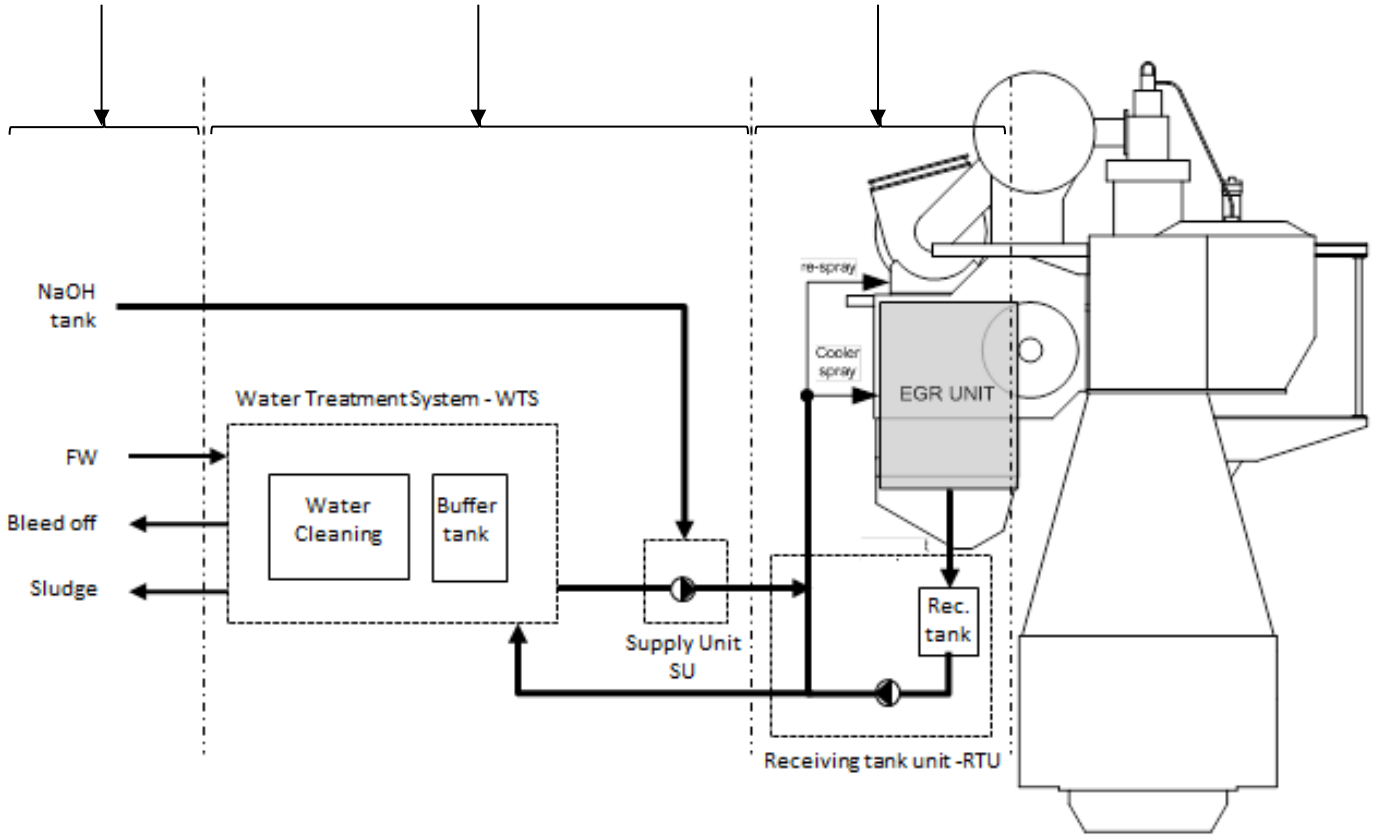

NO_x Tier III Certification

EGR shop test set up, reduced installation

E/B permanent

Supply pump

NaOH pump

Buffer tank

NaOH tank

E/B assembly

EGR Unit

Receiving Tank Unit

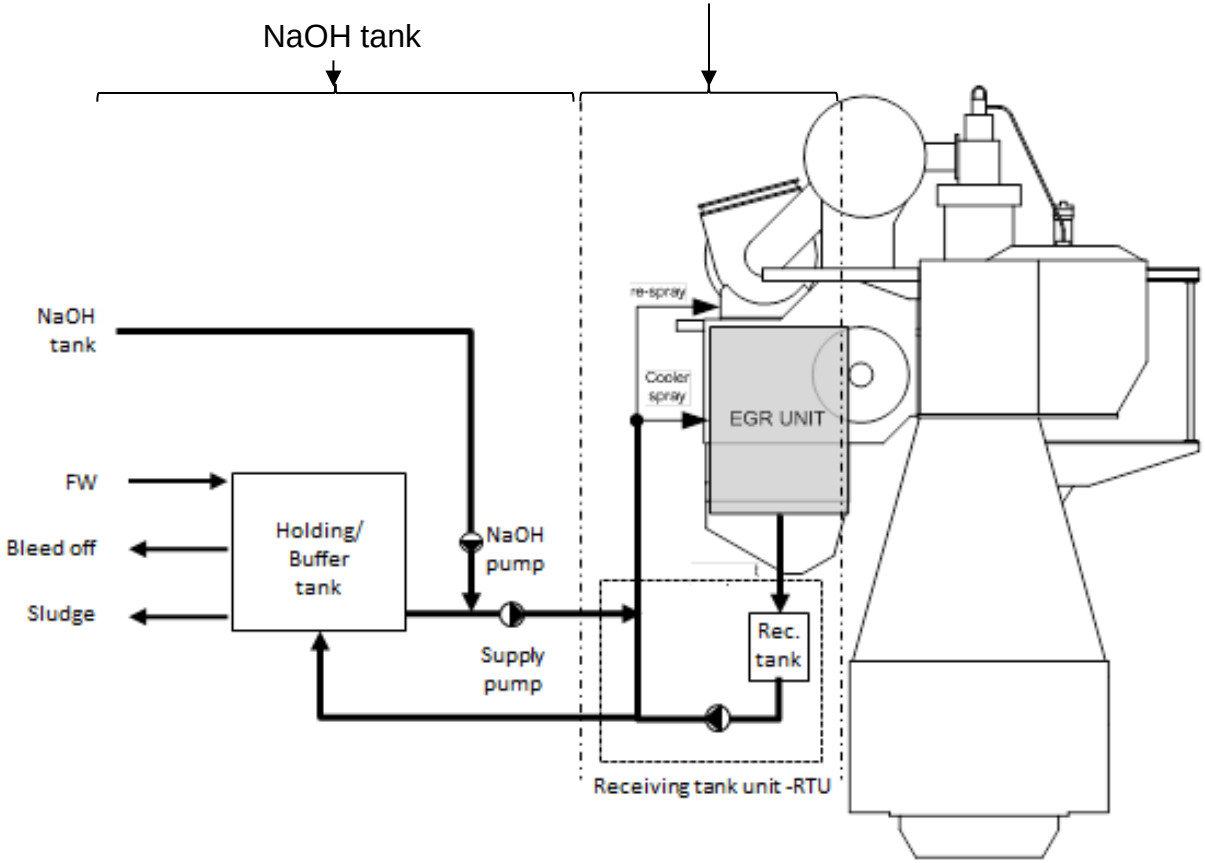

Combined EGR and EGCS

Arrangement

1. Exhaust gas cleaning system
2. Two-stroke MAN B&W engine with integrated EGR
3. NaOH tank
4. Scrubber water circulation tank
5. Water treatment system
6. Receiving tank unit

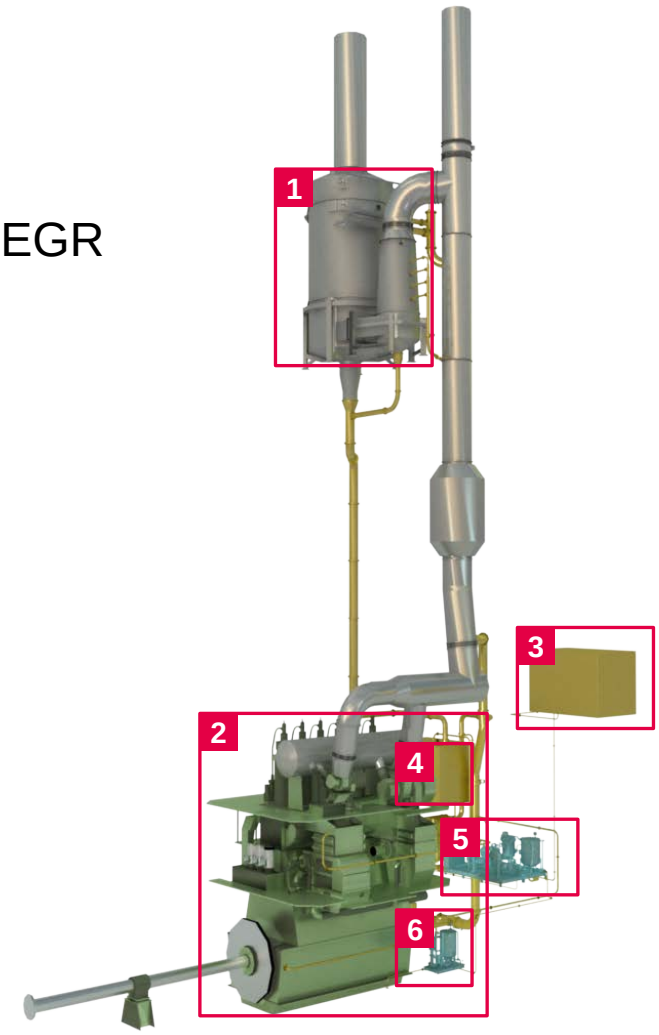

NO_x Reduction on 2-Stroke Engines

EGR - SCR Capital Expenditure (CAPEX)

Investment costs

CAPEX comparison: EGR (Low Sulphur) vs. SCR (Low Sulphur)

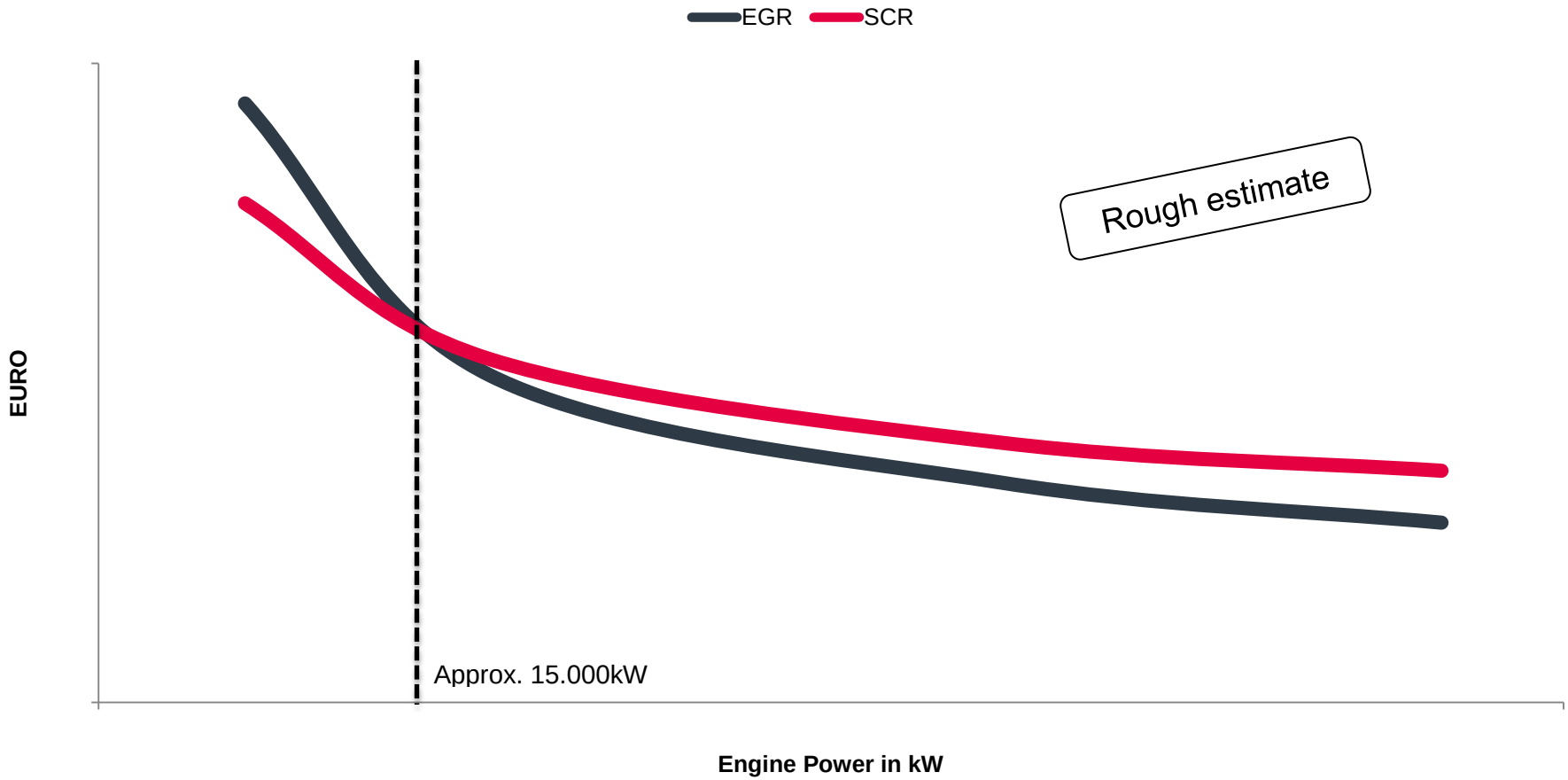

NO_x Reduction

EGR - SCR operational cost

Operational cost: EGR – SCR

Example 60.5 MW, 4800 h/year (TII) + 1200 h/year (TIII)

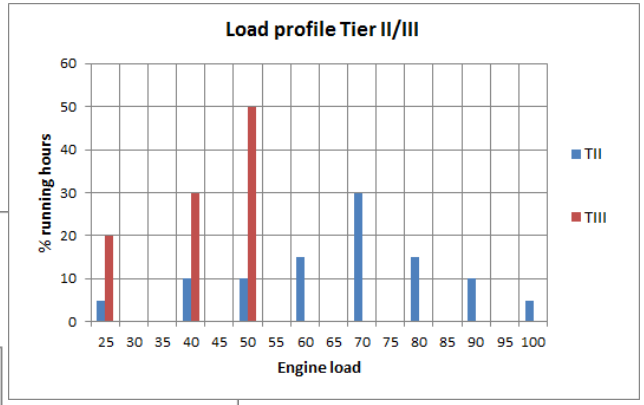

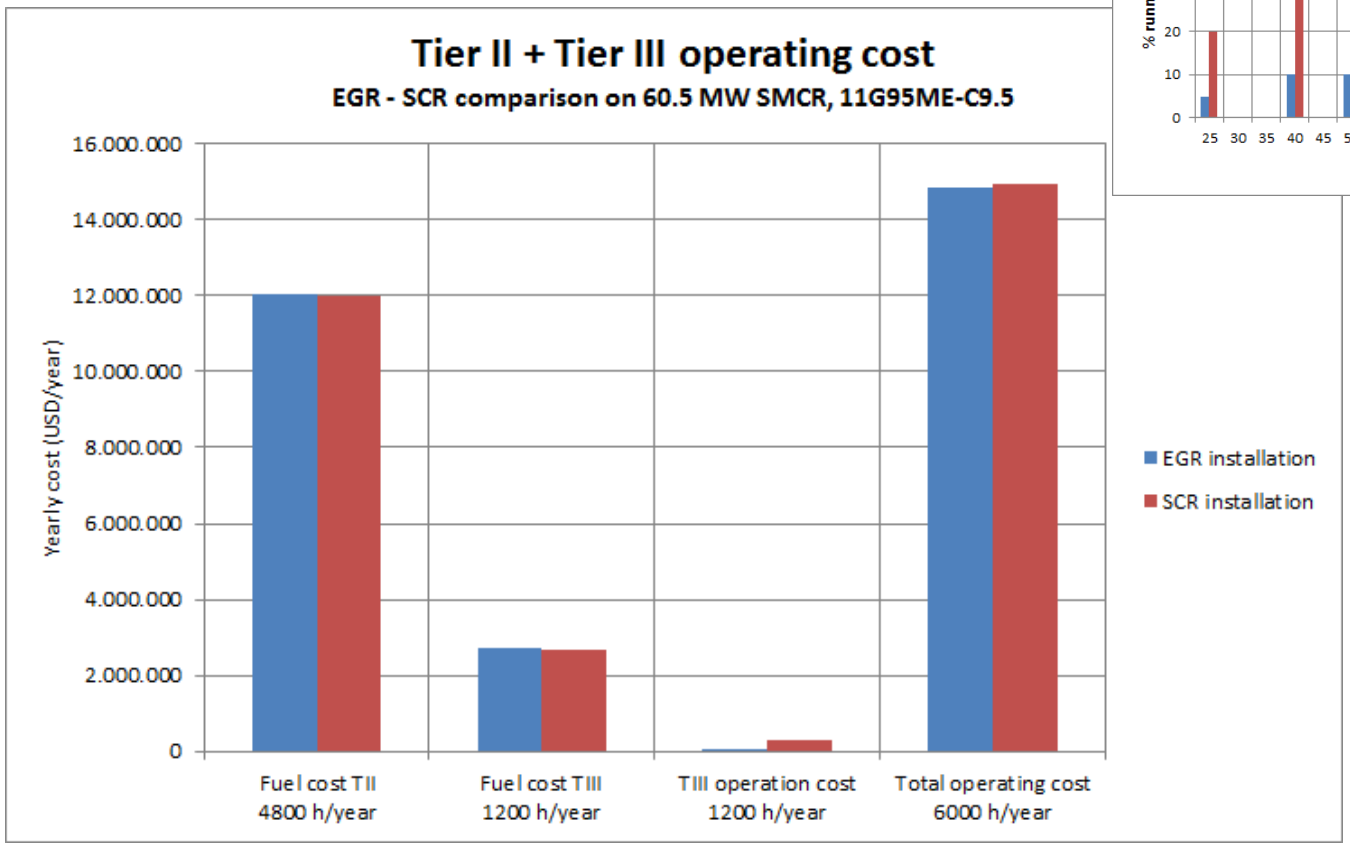

OPEX EGR and SCR

Cost assumptions used in example

Basic assumptions:

- LS MGO: 600 $/ton
- Urea, 40%: 300 $/ton
- NaOH, 50%: 200 $/ton
- Sludge disp.: 100 $/ton

HP-SCR and LP-SCR based on low sulphur fuel:

- SCR Catalyst exchange: each 5 year
- SCR Catalyst exchange cost: 6000 $/m3
- SCR Catalyst exchange, basis: 1500 hour in ECA per year
- Electrical consumption, SCR: 5 kW/MW

- SFOC penalty T II → T III: SFOC (T III) – SFOC (T II)

OPEX EGR and SCR

Total cost

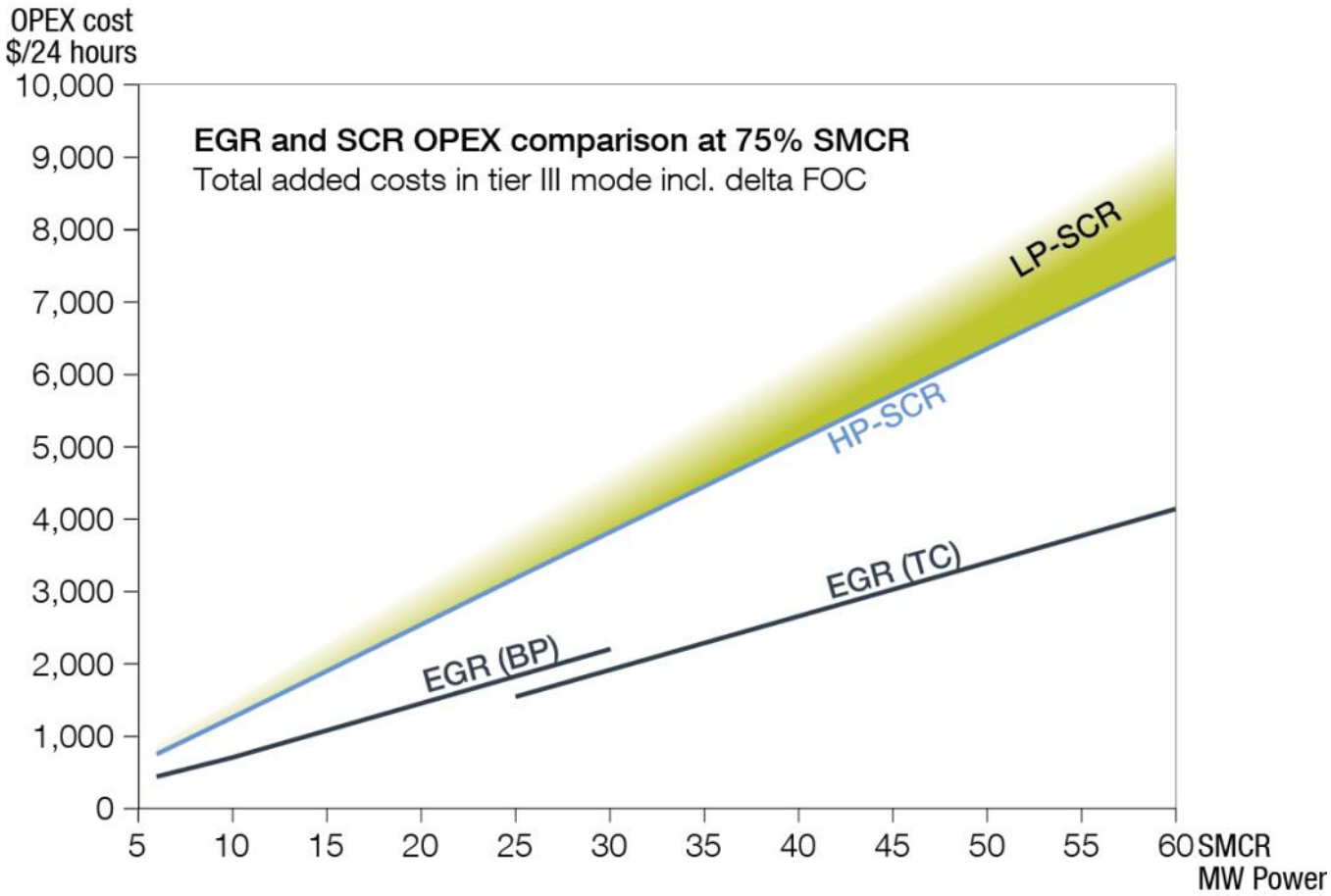

Note:
The LP-SCR OPEX adds to the HP-SCR calculation. The extra fuel consumption for the LP-SCR burner for decomposition of urea is shown with the green colour.

EGR and HP SCR

Pros & cons

If this is important, you will lean towards:	EGR	SCR
Low first cost/CAPEX	⇔	
Fuel flexibility	⇔	
Same technology for ME and gensets		→
No sludge production		→
No excess condensate overboard compliance		→
Easy and cheap commisioning/certification on testbed	←	
Low operating cost/many ECA hours	←	
Compact engine	←	

2 Stroke References - EGR

Market Demand for IMO Tier III Compliance

Operator / Vessel	NYK Line
Engine	1 x 6S60ME-C8.2
SMCR kW	14280
Ship type & capacity	Bulker 81.600 DWT
Builder	Mitsubishi
Yard	Tsuneishi Japan
Technology	EGR Commercial TIER III compliant engine

Operator / Vessel	Chevron
Engine	2 x 6G70ME-C9.2
SMCR kW	21840
Ship type & capacity	158,000 DWT Tanker
Builder	Doosan
Yard	Samsung Heavy Industries
Technology	EGR (High Sulphur) Commercial TIER III compliant engine

2 Stroke References - EGR

Market Demand for IMO Tier III Compliance

Operator / Vessel	A.P. Møller Maersk
Engine	1 x 6S80ME-C9.2
SMCR kW	27060
Ship type & capacity	4,496 TEU CV
Builder	Hyundai Heavy Industries
Yard	Hyundai SBD
Technology	EGR (High Sulphur) Commercial TIER III compliant engine

Operator / Vessel	BP Shipping
Engine	12 x 5G70ME-C9.5 GI
SMCR kW	18200
Ship type & capacity	174,000 DWT LNGC Tanker
Builder	Doosan
Yard	DSME
Technology	EGR (Low Sulphur) Commercial TIER III compliant engine

2 Stroke References - EGR

Market Demand for IMO Tier III Compliance

Operator / Vessel	Hartmann
Engine	5 x 6G60ME-C9.5 GI/E
SMCR kW	16060
Ship type & capacity	85,000m³
Builder	Hyundai Heavy Industries
Yard	DSIC
Technology	EGR (High Sulphur) Commercial TIER III compliant engine

- Design HB-Hunte Engineering

References

TIER III Engines on MAN 2 Stroke Engines

No. of ships	No. of engines	Cyl	St	Bore	Type	Mk	Gas	Technology	Catalyst WTS maker	Vessel Type	Cap.	Unit	Shipowner	Shipowner Country	Shipyard	Shipyard country	Engine Builder	Del Year
1	1	6	S	46	MC-C	8.1		**HP SCR HS**	**Hitachi**	Bulker Open Hatch	38206	dwt	Nissho Shipping	Japan	Naikai Shipbuilding	Japan	HZC	2011
3	3	6	S	50	ME-C	8.2		**HP SCR HS**	**HHI**	LPG tanker	20600	dwt	YARA	Norway	HMD	Korea	HHI	2015
6	6	6	G	60	ME-C	9.5		**LP SCR**	**Doosan**	Ethane Carrier	82000	dwt	Reliance industries	India	Samsung Heavy Ind.	Korea	Doosan	2015
1	1	6	S	60	ME-C	8.2		**EGR**		Bulker	81600	dwt	NYK Line	Japan	Tsuneishi	Japan	MES	2014
2	2	6	G	70	ME-C	9.2		**EGR HS**		Crude Oil Tanker	158000	dwt	Chevron	USA	Samsung Heavy Ind.	Korea	Doosan	2013
1	1	6	S	80	ME-C	9.2		**EGR HS**		Container	4496	teu	A.P. Moeller-Maersk	Denmark	HHI-SBD	Korea	HHI	2012
6	12	5	G	70	ME-C	9.5	GI	**EGR LS**		LNGC Tanker	174000	CBM	BP Shipping	UK	DSME	Korea	Doosan	2017
5	5	6	G	60	ME-C	9.5	GI/E	**EGR LS**		Ethane Gas Carrier	85.000	CBM	Hartmann	Germany	DSIC	China	HHI	2017

Total **SCR** engine	**10** engines
Total **EGR** engine	**21** engines

Q4-2015

Emission Project Guide

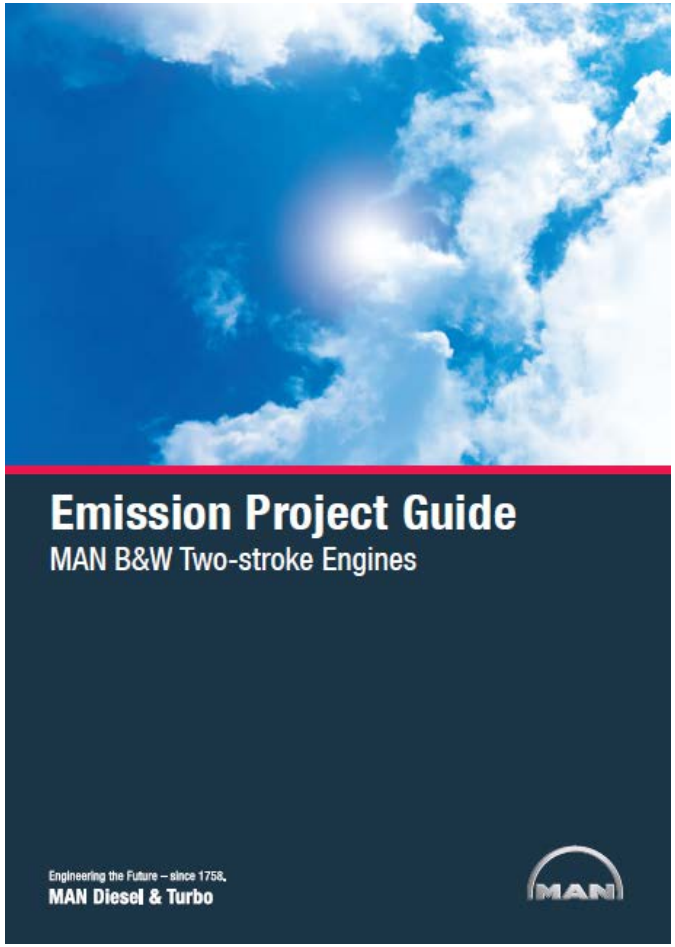

Tier III compliance on MAN B&W Two-stroke engines

EGR SCR

Relevant information is found in the Emission Project Guide

Thank You for Your Attention!

All data provided in this document is non-binding. This data serves informational purposes only and is especially not guaranteed in any way. Depending on the subsequent specific individual projects, the relevant data may be subject to changes and will be assessed and determined individually for each project. This will depend on the particular characteristics of each individual project, especially specific site and operational conditions.